Hydraulic Breaker Model: **TOP-205J**

Technical Data Sheet

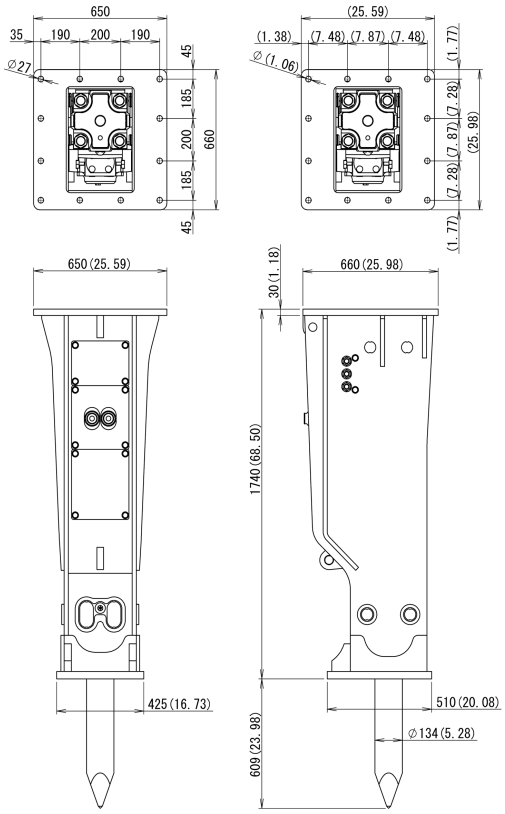

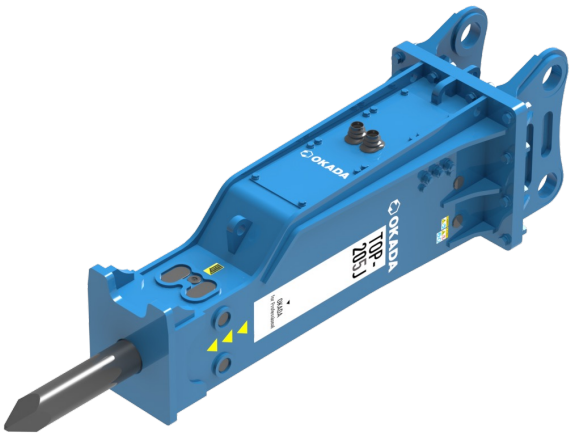

			TOP-205J
Operating weight	Vertical box bracket	kg	1800
		lbs	3968
Overall length	Vertical box bracket (w/o head)	mm	2349
		inch	92.5
Chisel diameter		mm	135
		inch	5.3
Frequency		bpm	360-560
Working pressure		bar	150-180
		psi	2180-2610
Relief set pressure		MPa	20
		bar	200
		psi	2901
Oil flow consumption at working pressure		L/min	110-135
		gpm	29-36
Hose inner diameter		mm	25
		Inch	1
Carrier machine weight		ton	20-23
ACC gas pressure		bar	60
		psi	870
Back cap gas pressure		bar	3
		psi	44
Measured Sound Power Level		dB	126
Guaranteed Sound Power Level		dB	128
Equipment		Accumulator	●
		Auto Stop system	●
		Speed adjuster	●
		Auto greasing kit	●*
		Under water kit	●*
		Unique parts composition	●

*Option

(Note) The above specifications are subject to change without notice.